A paper presented at the Sixty-sixth General Meeting, held at New York City, September 27, 1934, Mr. James H. Critchett presiding.

CALCIUM: ITS METALLURGY AND TECHNOLOGY.[1]

By C. L. Mantell[2] and Charles Hardy.[3]

Abstract.

The properties, characteristics, preparation and applications of calcium in chemistry and metallurgy are presented. The metal has been found useful in the purification of lead and the preparation of its alloys; the deoxidation and degasification of copper and its alloys; as a metallurgical addition agent in connection with leaded bronzes, miscellaneous non-ferrous alloys; the purification of cast iron and steel; the betterment of commercial grades of nickel, aluminum, beryllium, magnesium, and others, as well as a reducing agent for some of the rare metal oxides.

PHYSICAL AND CHEMICAL PROPERTIES.

Calcium is an uncommon metal whose physical and chemical properties have been little appreciated and whose availability and applications have for the most part been unnoticed. In its commercial forms on freshly cut surfaces, calcium is white in color, approximating that of silver. Fractured surfaces are more brilliant than steel. Upon exposure in the presence of moisture, thin films of bluish-gray oxide form. These are protective against further attack. Unlike sodium or the alkali metals, calcium may be readily handled, allowed to come in contact with the skin without danger, and may be treated like magnesium and aluminum. The metal is ductile and malleable. It can be machined in a lathe, turned into shapes, drilled, threaded, sawed, extruded, pressed, hammered into plates, and drawn into wire. Its commercial forms include chunks, bars, shavings, rods, and, very recently, powders.

The physical and chemical properties of calcium are tabulated in Table I. Under a 500 kg. load, calcium shows a Brinell hardness of 17, while under the same conditions the figure is below 1 for sodium.

[1] Manuscript received July 23, 1934.

[2] Consulting Metallurgist, and [3] President, Hardy Metallurgical Co., New York City.

TABLE I. *Physical and Chemical Properties of Calcium.*

		Reference
Atomic weight	40.08	
Boiling point	1,170° C., 2,138° F.	
Compressibility constant, cubical		
At 30° C., 0 atm. pressure	$\beta = 5.885 \times 10^{-6}$	I. C. T. vol. 3, p. 46
At 30° C., 11,600 atm. pressure	$\beta = 5.300 \times 10^{-6}$	I. C. T. vol. 3, p. 46
At 20° C., 99-493 atm. pressure	$\beta = 5.8 \times 10^{-6}$	I. C. T. vol. 3, p. 46
	where $\beta = -\frac{1}{\text{vol.}_{\text{cm.}}} \times \frac{d\,V_{\text{cc.}}}{d\,P_{\text{atm.}}}$	
Electrical conductivity		
Equal cross-sectional area	Ag = 100, Ca = 45.1	
Equal weight and length	Ag = 32.5, Ca = 100	
Elongation	6%	I. C. T. vol. 2, p. 592
Hardness		
Von Moh mineralogical scale	2.5	
Brinell	17 (500 kg. load)	
Scleroscope	19-20	
Heat of vaporization	399 kilo joules/gram atom	I. C. T. vol. 1, p. 102
Magnetic susceptibility	1.10×10^{-6} cgsm at —170° to 18° C.	I. C. T. vol. 6, p. 354
Melting point	810° C., 1,490° F.	
Rapid oxidizing point	260° C., 500° F.	
Specific gravity	1.55	
Specific heat		
—185° to 20° C.	0.157	
0° to 100° C.	0.149	
Tensile strength	8,700 lb./sq. in.	
Thermal expansion	0.000025 cm./cm./deg. C.	I. C. T. vol. 1, p. 104
Vapor pressure		
At 731° C.	0.001 mm. Hg	I. C. T. vol. 3, p. 205
At 917° C.	1 mm. Hg	I. C. T. vol. 3, p. 205
At 1,170° C.	760 mm. Hg	I. C. T. vol. 3, p. 205

Pure aluminum has a hardness of 25,[4] while magnesium is 30[5] to 32.[6] Machined sections of calcium show Rockwell B hardnesses of 36 to 40. Scleroscope hardnesses on commercial material are of the order of 11 to 12, and on purified material 19 to 20 as compared to 20 to 23 for magnesium.

Calcium cannot be cast by ordinary foundry methods, as it oxidizes readily at elevated temperatures. Oxidation is exceedingly rapid at its melting point, 810° C. Melting and casting procedures employing protective fluxes or operations conducted in the presence of non-oxidizing and non-reacting gases allow the production of sound cast forms of the metal. Calcium is heavier than sodium and the alkali metals but lighter than beryllium, magnesium, or aluminum. For equal cross sectional area, its electrical conductivity is exceeded only by silver, copper, gold, and aluminum. For equal weight and length, calcium is among the best available conductors.

Calcium is more active chemically than barium or strontium. On a price basis, calcium is by far the cheapest of the alkaline earth metals, but is more expensive than sodium which is lower in atomic weight and cheaper in cents per pound. In organic syntheses, sodium is in a better competitive position. However, in metallurgical work, as a deoxidizing agent, reducing agent, degasifier, and alloying metal, the low melting point and high vapor pressure of sodium are disadvantages which eliminate it.

PRODUCTION OF CALCIUM METAL.

Calcium is produced by the electrolysis of fused calcium chloride.[7] Owing to hydrolysis and the formation of basic salts, pure anhydrous $CaCl_2$ can be prepared only with difficulty. In the presence of basic salts, calcium metal is attacked and dissolved by the electrolyte to the extent of 17 per cent. During electrolysis, if basic salts are allowed to form, the bath thickens, the conductivity decreases, and the calcium yield falls off. In commercial work the electrolyte must be completely changed at periodic intervals.

Pure calcium chloride melts at 780° C. and impure calcium metal at 800° C. The range of safe working temperatures is small, as the finely divided metal burns in air above 800° C. and easily forms metal fog in the electrolyte. The decomposition voltage of calcium chloride at

[4] Edwards, Frary, and Jeffries, "Aluminum Products and Their Fabrication," p. 551, McGraw-Hill Book Co., Inc., New York (1930).

[5] "Magnesium," American Magnesium Corporation, Niagara Falls, N. Y. (1923).

[6] The Dow Chemical Co., Midland, Mich.

[7] Mantell, C. L., "Industrial Electrochemistry," p. 346, McGraw-Hill Book Co., Inc., New York (1931).

800° C. is given as 3.24 volts,[8] while the specific conductivity at the same temperature is 1.9.[9]

The commercial method for calcium production uses a vertical contact cathode upon which the calcium is deposited as the cathode is continuously moved upward (Fig. 2). Very high cathode current densities are used, being of the order of 650 amp./sq. in. (100 amp./cm.^{2}). The electrolyte is pure calcium chloride kept at 780° to 800° C. The energy consumption is of the order of 50,000 kw-hr./ton, or 22 to 25 kw-hr./lb. Fig. 1 shows a commercial cell operating in a French plant.

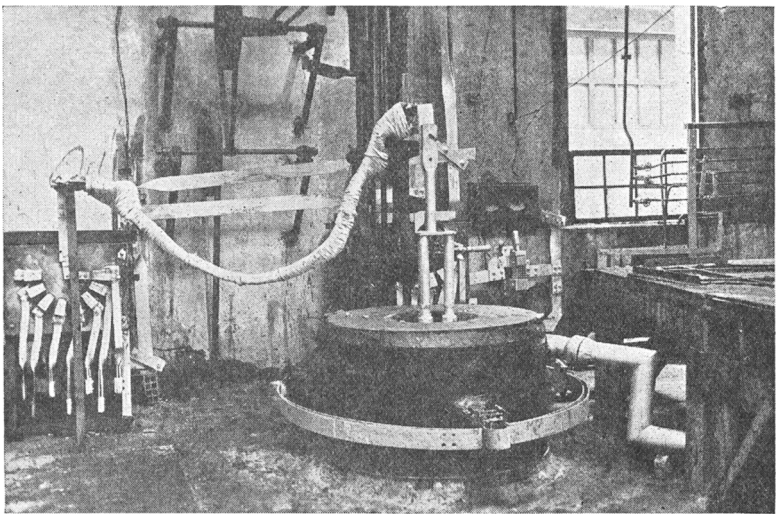

FIG. 1. Calcium cell in operation at the plant of the Société d'Electrochemie et d'Electrometallurgie d'Ugine, Jarrie, France.

Theoretically, 2.76 kg. of calcium chloride are needed per kg. of calcium. In actual practice this ratio is closer to 4 or 5 kg. of calcium chloride to one of metal. Low recovery values are chiefly due to the atomizing effect of the violent chlorine evolution. This causes a fine spray of electrolyte which is carried up the flue of the ventilating system. Other losses are due to the necessary skimming of the bath at intervals and to the layer of chloride formed on the calcium as it is drawn from the bath. Once in operation, the cathode is effectively one of calcium metal. Thin layers of calcium chloride protect the metal from the air. The commercial metal may contain small quantities of carbon, carbide, and alkali and alkaline earth metals.

[8] Arndt and Willner, Z. Elektrochem., **14**, 216 (1908).
[9] Arndt and Gessler, Z. Elektrochem., **14**, 662 (1908).

A diagrammatic sketch of the cell is shown in Fig. 2. The cell A is of graphite, water-cooled at the bottom C, and insulated at F on the sides. The electrolyte B is in the graphite container but separated from it by a layer D of unmelted or frozen electrolyte. The anodes G-G with water-cooled terminals are of graphite and are adjustable sidewise. The cathode H, also water-cooled, is adjustable vertically. Operation is so conducted that the surface of the deposited calcium in contact with the electrolyte is kept molten. As the metal accumulates, the cathode is

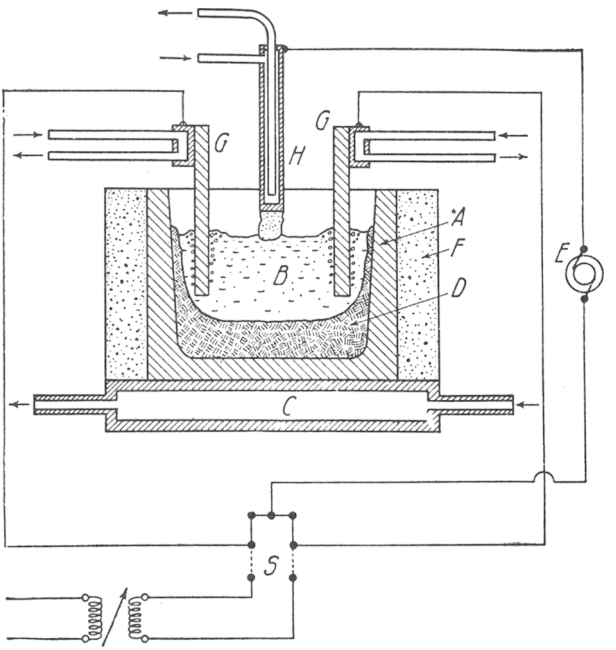

FIG. 2. Sketch of cell for manufacturing sticks of calcium metal on rising cathode (H) by electrolysis of fused calcium chloride.

gradually elevated and a rod of calcium of indefinite length is produced. The calcium cabbages or chunks are of the order of 20 to 30 cm. in diameter (Fig. 3). The cell is put in operation by melting the electrolyte with alternating current, after which, by proper switching devices, direct current for electrolysis is used. The resistance of the bath is maintained at such a point that the electrolyte is kept molten by the action of the current.

APPLICATIONS OF CALCIUM METAL.

Laboratory studies of calcium production have been made by a large number of workers.[10-16] Laboratory applications of calcium metal

are well known. It burns brightly in oxygen, combines with sulfur, chlorine, nitrogen, and other materials, and reduces nearly all metallic oxides on heating. Calcium is used in freeing absolute alcohol from the last traces of water. The liquid is digested with calcium turnings, after which the alcohol is distilled. The application of calcium in producing high vacua is common knowledge. If the metal be heated in a tube connected with a vessel at low pressure, it takes up the last traces of air, forming oxides and nitrides, thereby reducing the pressure in the system to very low values.

FIG. 3. Two calcium cylinders or rods produced in cell shown in Fig. 1. Also a glass jar of calcium metal shavings.

Calcium does not react or take up argon. It is therefore employed for the separation of argon from nitrogen. When rapidly heated in CO_2, the metal is converted to lime and calcium carbide (CaC_2). The hydride CaH_2 is formed by passing hydrogen over heated calcium, and in a similar way the nitride Ca_3N_2 is produced by passing nitrogen over the metal. When heated in ammonia, calcium forms the hydride and nitrogen. When reacted with steam, the nitride gives off ammonia.

[10] Ruff and Plato, Ber., **35**, 3612 (1902).
[11] Wöhler, Z. Elektrochem., **11**, 612 (1905).
[12] Brace, Trans. Electrochem. Soc., **37**, 465 (1920); Chem. Met. Eng., **25**, 105 (1921).
[13] Goodwin, J. Am. Chem. Soc., **25**, 873 (1903); **26**, 1403 (1904).
[14] Johnson, Trans. Electrochem. Soc., **18**, 125 (1910).
[15] Frary, Bicknell, and Tronson, Trans. Electrochem. Soc., **18**, 117 (1910).
[16] Rathenau, Z. Elektrochem., **10**, 508 (1904).

Ammonia is absorbed by calcium in the cold with the formation of a compound $Ca(NH_3)_6$, an exothermic reaction. In the absence of air, this material is converted to $Ca(NH_2)_2$. Laboratory applications in which calcium is employed as a removal agent for small amounts of oxygen, moisture, and other substances with which it reacts readily, the calcium metal meanwhile being in a solid form, are well known.

Industrial applications and investigations have been quite numerous in recent years. An appreciable patent literature has been built up. The specific uses include the refining of lead; the preparation of lead alloys; the deoxidation of copper; the preparation of the copper-calcium alloys; the making of bearing bronzes of the high lead type; the use as a deoxidizer and refining agent in cast iron, nickel and its alloys, particularly iron-nickel and chromium-nickel; applications as an alloying, purifying, and modifying agent in aluminum, magnesium, and beryllium alloys; as a reducing agent in the preparation of chromium metal powder, thorium, and uranium; suggested uses in the desulfurization and refining of petroleum and related products; as well as the application in chemical syntheses and minor uses.

DEBISMUTHIZING OF LEAD.

Calcium is an effective agent for the debismuthizing of lead to make it suitable for white lead manufacture. When metallic calcium is introduced into molten lead, calcium-bismuth drosses are formed. The bismuth content is reduced to less than 0.05 per cent and the last traces of arsenic, antimony, silver, and copper are removed. Lead-calcium alloys containing approximately 3 per cent calcium are, in a manner similar to the desilverization of lead bullion with zinc, stirred into the lead by a mixing machine. Other processes, such as cooling, blocking out, and reducing the bath close to the freezing point of lead, follow desilvering operations. Excess calcium remaining in the lead is removed by chlorination. Considerable development of the process has been carried on by the American Smelting and Refining Company.[17-19]

[17] Brit. Pat. 370,026, Oct. 31, 1929, to Jesse O. Betterton, of American Smelting and Refining Co. In a process for refining lead, silver is removed from the molten lead by zinc, and bismuth by an alkaline earth metal, e.g., calcium. The excess of zinc and alkaline earth metal are removed as chlorides by adding chlorine to the bath.

[18] French Pat. 704,780, Oct. 30, 1930, to Jesse O. Betterton. Silver is removed from lead by the addition of zinc, whereby a dross of silver is formed. A calcium-lead alloy is added to separate bismuth and a part of the zinc as a dross. The bath is cooled to separate more bismuth, then reheated and covered with a layer of chloride. Chlorine is passed in to remove the remainder of zinc and the calcium.

[19] French Pat. 39,869, March 14, 1931, to Jesse O. Betterton. In the process of French Patent 704,780 the calcium-lead alloy may be added along with or before the zinc. The dross of bismuth, calcium, zinc, and lead are fused under a slag composed of dehydrated calcium chloride and sodium chloride at 540° to 700° C., and the lead, bismuth, and calcium are separated by liquidation.

CALCIUM LEAD ALLOYS.

The age-hardening of lead-calcium alloys has been the subject of a large amount of investigation. The lead-calcium alloy system was studied in considerable detail by Caron,[20] Donski[21] and Baar.[22] The system is characterized by the presence of the compounds Pb_3Ca, PbCa, and $PbCa_2$. Only alloys in the range between pure lead and Pb_3Ca are at present of commercial interest.

During the War the demand for shrapnel bullets caused a shortage of antimony and antimonial lead, and the lead-barium-calcium alloys known as Frary[23] or Ulco metal were developed. These hard alloys, containing up to 2 per cent barium and 1 per cent calcium, also found considerable favor for bearings. Investigators have studied the physical properties of lead alloys up to 2 per cent calcium for use as bearing materials. In these, large particles of Pb_3Ca cause hardening and furnish bearing surfaces. "Bahnmetal," widely used as a lining for bearings on German railways, contains about 0.75 per cent calcium with 0.5 per cent sodium and 0.05 per cent lithium.

Schumacher and Bouton[24] determined the existence of a definite range of age-hardening lead-calcium alloys. They state that some of these hardenable alloys possess properties which strongly recommend them for commercial uses. Compared with the 1 per cent antimony-lead alloy, which is generally recognized as one of the best cable sheathing materials, the lead-calicum alloys develop greater fatigue resistance, tensile strength and hardness. These properties reach nearly constant values shortly after extrusion because of the rapid rate of precipitation of calcium from solid solution, and the slow rate of diffusion and agglomeration of calcium, or the molecule Pb_3Ca. The 1 per cent antimony-lead alloy continues to change even after a period of years. Experiments on corrosion resistance show the lead-calcium alloys to be so little different from the 1 per cent antimony-lead alloy as to have no appreciable effect on the life of a cable.

Townsend and Greenall[25] state that the 0.04 per cent calcium-lead alloys show much higher endurance curves and greater fatigue resistance than the 1 per cent antimonial lead. Their curves are given in Figure 4.

[20] Lieb. Ann., p. 111 (1859).
[21] Z. anorg. Chem., **57**, 185-219 (1908).
[22] Z. anorg. Chem., **70**, 352-394 (1911).
[23] Cowan, Simkins, and Hiers, Trans. Electrochem. Soc., **40**, 27-48 (1921).
[24] Metals and Alloys, **1**, 405-9 (1930).
[25] Am. Soc. Test. Mat. (1930).

Independent investigation by Dean and Ryjord[26] shows that the lead-calcium alloy containing 0.03 to 0.04 per cent calcium and cooled from an extrusion temperature of 225° to 250° C. has a tensile strength of about 4,000 lb./sq. in. (280 kg./cm.^{2}), a dynamic strength of 1,200 to 1,500 lb./sq. in. (84 to 105 kg./cm.^{2}) as determined on the Moore machine at 1,700 r.p.m., and a static "fatigue" strength markedly superior to the 1 per cent antimony alloy. These properties make this

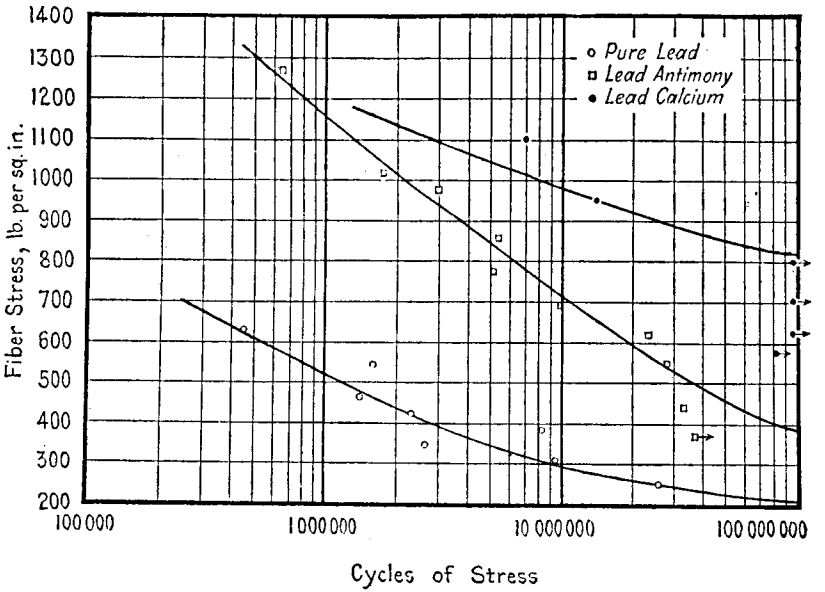

FIG. 4. Endurance curves for pure lead, 1% antimony, and 0.04% calcium alloys for cable sheathing according to Townsend and Greenall, A. S. T. M., 1930.

alloy a superior cable sheathing. 0.02 to 0.1 per cent calcium in a calcium-lead alloy was suggested as sheathing material for electrical cables.[27-33]

[26] Metals and Alloys, **1**, 410-14 (1930).

[27] Brit. Pat. 314,522, June 29, 1928, to R. S. Dean assignor to Standard Telephones and Cables, Ltd. 0.02 to 0.1 per cent calcium, balance lead.

[28] Brit. Pat. 356,801, Oct. 30, 1929, to G. M. Bouton assignor to Standard Telephones and Cables, Ltd. 0.02 to 0.1 per cent calcium, balance lead.

[29] Canad. Pat. 306,610, Dec. 9, 1930, to R. S. Dean assignor to Western Electric Co., Inc. 1 per cent calcium, balance lead.

[30] U. S. Pat. 1,880,746, Oct. 4, 1932, to G. M. Bouton assignor to Bell Telephone Laboratories, Inc. 0.02 to 0.1 per cent calcium, balance lead.

[31] U. S. Pat. 1,890,013, Dec. 6, 1932, to R. S. Dean assignor to Western Electric Co., Inc. 0.1 per cent calcium, balance lead.

[32] U. S. Pat. 1,890,014, Dec. 6, 1932, to R. S. Dean assignor to Western Electric Co., Inc. Less than 1 per cent calcium (0.02 to 0.1), balance lead.

[33] Germ. Pat. 581,311, July 25, 1933, to International Standard Electric Corp. 0.02 to 0.1 per cent calcium, balance lead.

Large scale field tests of lead-calcium alloys on commercial telephone and cable lines have been conducted since 1930. They will serve as final criteria of the commercial usefulness of the alloys. The manufacture of cable sheaths for electrical lines requires so much lead that it is ranked as one of the three major consuming industries. It is interesting to note that if all cable sheath in the United States—an industry which consumes from one-fifth to one-quarter million tons of lead a year—were made of the 0.04 per cent calcium alloy, one hundred tons of calcium would be needed annually for this use alone.

Very small amounts of calcium appreciably increase the deformation pressure of a high purity lead.[34]

CALCIUM AS A DEOXIDIZER FOR COPPER AND ITS ALLOYS.

As far back as 1907, Pratt[35] claimed the use of calcium for deoxidation and degasification of copper. Within recent years studies of this effect have been intensely pursued. Masing[36] has described the use of calcium in producing deoxidized copper castings of high conductivity. This work was carried forward in the research laboratories of the General Electric Company and the Bell Telephone system by Schumacher, Ellis, and Eckel in a series of papers,[37] Zickrick,[38] Wyman,[39] as well as many others who have not published their work. Schumacher and his co-workers concluded that small additions of calcium in copper effectively deoxidize the metal without materially impairing the mechanical properties and electrical conductivity, provided the residual calcium is kept to a small percentage. The resulting deoxidized copper is not embrittled by annealing and reducing gases.

The solubility of calcium in copper is slight, according to the equilibrium diagram of the copper-calcium system by Baar.[40] Zickrick, in his study of the conductivity of copper castings,[41] concluded that for copper castings the best deoxidizers in reference to their effect on conductivity were calcium, calcium boride, or boron carbide. The calcium was introduced in the form of a copper-calcium alloy.

Considerable interest was shown and experimental work carried on in connection with over-deoxidized copper which, instead of having

[34] Zickrick, Trans. Am. Inst. Mining Met. Eng., Inst. Metals Div., **99**, 345 (1932).

[35] Brit. Pat. 1,699 (1907).

[36] Masing and Haase, Wiss. Veröffentlich. Siemens Konzern, **7**, 321 (1928).

[37] Trans. Am. Inst. Mining Met. Eng., Inst. Metals Div., **1930**, 151; Metals and Alloys, **1**, 714-16 (1930); Trans. Electrochem. Soc., **61**, 91-99 (1932).

[38] Trans. Am. Inst. Mining Met. Eng., Inst. Metals Div., **104**, 152 (1933).

[39] Trans. Am. Inst. Mining Met. Eng., Inst. Metals Div., **104**, 141 (1933).

[40] Z. anorg. Chemie, **70**, 352 (1911).

[41] Gen. Elec. Rev., **37**, 187 (1934).

little or no residual calcium remaining in the final product, carried a slight excess of calcium to protect the metal and maintain it in a deoxidized condition during further working and fabrication.

Calcium has been shown to be a preferred deoxidizer to other metals of the alkaline and alkaline earth series. Small amounts of calcium give superior qualities to copper as regards resistance to embrittlement. High-calcium copper alloys are satisfactory deoxidizers. Calcium is preferred to silicon as a deoxidizer for copper, in that it affects the conductivity very little, while silicon affects it markedly.

High-calcium copper alloys are now commercially available. They can be produced in brittle forms which are readily powdered or ground. Their manufacture involves the melting of copper and the addition of calcium to the melted copper. Calcium has a lower melting point than copper, and when added to the molten metal readily melts and alloys.

Calcium is an excellent deoxidizer for high strength tin-copper bronzes. It serves as an effective reagent suppressing lead segregation in the case of the high leaded bearing bronzes which are tin-free and have lead contents of the order of 30 to 50 per cent, with copper 70 to 50 per cent.[42]

Copper and lead do not alloy. In copper-lead mixtures, lead segregation takes place very rapidly and is excessive in alloys containing 30 per cent or more lead. These mixtures are very useful for bearings necessary for engines operating at high speeds and high lubricating oil temperatures, at operating conditions under which the Babbitt, tin-lead, or related bearing metals fail. Without the use of lead segregation suppressors, manufacturing practice of the copper-lead materials is very difficult and unsatisfactory.

Calcium has been suggested as an alloying constituent for bearing metals having compositions of the order of 62 to 46 per cent Cu, Sn 4 to 8, Zn 3 to 10, Pb 30 to 35, Ca 0.2 to 0.5, and Na 0.1 to 3 per cent.[43]

CALCIUM IN FERROUS METALLURGY.

Metallic calcium in the form of briquettes made with sponge iron has been used as a deoxidizing agent to the extent of 0.5 per cent calcium for iron castings made in green sand molds.[44] Calcium-treated iron tends to be denser and more uniform in grain structure than ordinary cast iron and to have increased transverse and tensile strength and

[42] Herschman and Basil, U. S. Bur. Stand. J. of Research, **10**, May, 1933; U. S. Bur. Stand. Research Paper No. 551.

[43] U. S. Pat. 1,876,262, Sept. 6, 1932, to Georg Pemetzrieder.

[44] Mantell and Hardy, Metal Progress, **21**, 60-65 (1932).

better impact values (resistance to shock). Further work developed the use of calcium metal alone, additions of which to molten cast iron allowed the regulation of the amount of carbon in graphitic form, causing increase in the strength of the casting and control of the graphitization of the carbon.[45] Comparative values for ordinary cast iron and calcium treated cast iron as well as heat-treated cast iron show definite advantages due to calcium additions.[46]

Good results have been obtained with steel,[47] the calcium functioning as an effective deoxidizer and degasifier, thus producing cleaner steels. It has the advantage over other deoxidizers that practically none of the reagent is left in the metal. Improved characteristics of the steel are shown in higher yield points and greater tensile strength.

Methods had to be developed for introducing the calcium metal into the steel. Briquetting with sponge iron or steel chips gave only partial success. Mechanisms[48] were finally developed by means of which slugs or pieces of calcium were shot into the ladle of molten metal through an air pressure gun. Sufficient force can thus be applied to the calcium projectile to shoot it deep into the metal where it reacts, disintegrates, does its deoxidizing, and is converted into lime which rapidly rises to the slag.

Originally, projectiles of specific shape were employed, but later modifications of the gun use irregular chunks of calcium weighing about 2 oz. (57 g.) each. At the present time slugs can be shot at the rate of 120 to 150 per minute when the gun is hand operated, or 200 to 300 per minute if it is motor driven, and a 60-ton ladle of steel deoxidized in a period of approximately 5 minutes when 2 lb. (0.907 kg.) of calcium per ton of steel is used.

A recent application has been the use of calcium in deoxidizing and cleaning cast iron used in chilled rolls on which steel mill products are formed. One pound of calcium to 5,000 lb. of iron gave the same scleroscope hardness as 15 lb. of molybdenum to the same weight of iron.

Calcium finds commercial application in the manufacture of the 50 nickel-50 iron alloys as a deoxidizer and scavenger. In pure nickel casting and rolling it appears to have some value in reducing internal defects such as seams, and improving malleability. The amount used is of the order of 0.005 to 0.5 per cent.[49] In the case of the chromium-

[45] U. S. Pat. 1,683,086, Sept. 4, 1928, to A. F. Meehan; also U. S. Pat. 1,683,087, Sept. 4, 1928; U. S. Pat. 1,731,346, Oct. 15, 1929.
[46] U. S. Pat. 1,731,346, Oct. 15, 1929, to A. F. Meehan.
[47] Zieler, Archiv f. Eisenhüttenw., 5, 299 (1932).
[48] U. S. Pat. 1,915,824, June 27, 1933, to C. Hardy and D. M. Scott.
[49] French Pat. 746,395, May 27, 1933, to International Nickel Co., Inc. 0.005 to 0.5 per cent calcium, balance nickel.

nickel alloys, it is regularly employed to prevent the formation of chromium carbide. Its use tends to prevent cracking, makes rolling less difficult, and aids when thin sections of the high chromium high nickel alloys are cast. Considerable interest has been shown in the possibility of application of calcium in connection with the chromium-nickel steels, particularly of the low carbon austenitic type.

CALCIUM AND ALUMINUM, MAGNESIUM AND BERYLLIUM.

For a considerable period calcium has been used in connection with aluminum and aluminum alloy preparation. In the early development of the strong alloys, calcium was a useful addition in materials which were to be forged or mechanically shaped. In connection with the aluminum alloys containing copper and magnesium with or without manganese, it eliminated hot shortness during rolling of the ingot into sheet.[50] The amount of calcium added is 2 per cent or less, generally of the order of 0.6 to 1 per cent. In Europe and England calcium is used in connection with aluminum containing silicon to precipitate the silicon out of solution and form calcium silicide, with resultant elimination of the deleterious effects of silicon on the electrical conductivity of the aluminum.

Recently calcium additions to casting alloys of aluminum have received attention. Table II gives an indication of the extent of these alloys and the amount of calcium employed. Some application of calcium has been extended to the magnesium alloys, examples of which are included in the table.

Kroll[51] found that beryllium oxides could be reduced to form beryllium-iron alloys only with calcium or reducing agents containing calcium. Magnesium, aluminum, silicon, lithium, and cerium did not so function. Zieler[52] found by metallographic examination that zirconium and calcium decreased the number of non-metallic inclusions in steel ingots prepared in an electric furnace. It is stated that iron-beryllium alloys may be formed to the extent of 10 per cent beryllium by reacting beryllium oxide with a magnesium-calcium alloy containing 40 to 60 per cent calcium in the presence of Fe_2O_3. The beryllium and iron compounds are reduced and alloyed.[53]

Boiling magnesium does not dissolve beryllium, but in boiling calcium

[50] U. S. Re-issue 15,407 to F. C. Frary.

[51] Wiss. Veröffentlich. Siemens-Konzern, **11**, 88-92 (1932).

[52] Arch. Eisenhüttenw., **5**, 299-314 (1931-32).

[53] U. S. Pat. 1,945,565, Feb. 6, 1934, to Pokorny and Schneider of I. G. Farbenindustrie A.-G.

TABLE II.

Patent	Date of Issue	Inventor	Type	Al	Ca	Be	Bi	Co	Cr
Ger. 535,345	Dec. 10, 1922	Th. Goldschmidt A. G.	Casting	Balance	0.2-5	0.2-5	.....	0.2-5*	0.1-1*
Brit. 319,967	Oct. 31, 1928	D. R. Tullis		Balance	0.1-2.0	....	.....	.....	0.2-3.0
Fr. 729,566	Nov. 9, 1931	Établissements Émile Louyot		93.45	0.05	....	.....	.....	.....
U. S. 1,932,834	Oct. 31, 1933	Robert T. Wood to Aluminum Co. of America	Casting	Balance	0.1-2	....	.....	.....	.....
U. S. 1,932,836	Oct. 31, 1933	Robert T. Wood and Otto H. Heil to Aluminum Co. of America	Casting	Balance	0.1-2	....	.....	.....	.....
U. S. 1,932,837	Oct. 31, 1933	Robert T. Wood to Aluminum Co. of America	Casting	Balance	0.2	....	.....	.....	.....
U. S. 1,932,854	Oct. 31, 1933	Robert T. Wood to Aluminum Co. of America	Casting	Balance	0.05-2	....	.....	.....	.....
U. S. 1,932,855	Oct. 31, 1933	Robert T. Wood to Aluminum Co. of America	Casting	Balance	0.05-2	....	and/or Sb 0.05-0.4	.....	.....
U. S. 1,932,856	Oct. 31, 1933	Robert T. Wood to Aluminum Co. of America	Casting	Balance	0.05-2	....	.....	.....	.....
U. S. 1,932,857	Oct. 31, 1933	Robert T. Wood to Aluminum Co. of America	Casting	Balance	0.05-2	....	and/or Sb 0.05-0.4	.....	.....
U. S. 1,932,858	Oct. 31, 1933	Robert T. Wood to Aluminum Co. of America	Casting	Balance	0.05-2	....	and/or Sb 0.05-0.4	.....	.....
U. S. 1,932,859	Oct. 31, 1933	Robert T. Wood to Aluminum Co. of America	Casting	Balance	0.05-2	....	.....	.....	0.5-3.5
U. S. 1,932,860	Oct. 31, 1933	Robert T. Wood to Aluminum Co. of America	Casting	Balance	0.05-2	....	and/or Sb 0.05-2	.....	0.5-3.5
U. S. 1,932,861	Oct. 31, 1933	Robert T. Wood to Aluminum Co. of America	Casting	Balance	0.05-2	....	.....	.....	.....
U. S. 1,932,862	Oct. 31, 1933	Robert T. Wood to Aluminum Co. of America	Casting	Balance	0.05-2	....	and/or Sb 0.05-0.4	.....	.....
U. S. 1,932,863	Oct. 31, 1933	Robert T. Wood to Aluminum Co. of America	Casting	Balance	0.05-2	....	.....	0.5-3.5	.....
U. S. 1,932,864	Oct. 31, 1933	Robert T. Wood to Aluminum Co. of America	Casting	Balance	0.05-2	....	.....	.....	.....
U. S. 1,932,865	Oct. 31, 1933	Robert T. Wood to Aluminum Co. of America	Casting	Balance	0.05-2	....	.....	0.1-3.5	.....
U. S. 1,932,866	Oct. 31, 1933	Robert T. Wood to Aluminum Co. of America	Casting	Balance	0.05-2	....	.....	.....	0.5-3.5
U. S. 1,932,867	Oct. 31, 1933	Robert T. Wood to Aluminum Co. of America	Casting	Balance	0.05-2	....	and/or Sb 0.05-0.4	.....	0.5-3.5
U. S. 1,932,868	Oct. 31, 1933	Robert T. Wood to Aluminum Co. of America	Casting	Balance	0.05-2	....	and/or Sb 0.05-0.4	0.1-3	.....
U. S. 1,932,869	Oct. 31, 1933	Robert T. Wood to Aluminum Co. of America	Casting	Balance	0.05-2	....	and/or Sb 0.05-0.4	0.1-3.5	.....
U. S. 1,932,870	Oct. 31, 1933	Robert T. Wood to Aluminum Co. of America	Casting	Balance	0.05-2	....	.....	.....	0.5-3.5
U. S. 1,932,871	Oct. 31, 1933	Robert T. Wood to Aluminum Co. of America	Casting	Balance	0.05-2	....	.....	0.1-3.5	.....
U. S. 1,932,872	Oct. 31, 1933	Robert T. Wood to Aluminum Co. of America	Casting	Balance	0.05-2	....	and/or Sb 0.05-0.4	.....	.....
Fr. 730,088	Dec. 17, 1931	American Magnesium Corp.	Mg alloy	.....	0.1-2	....	.....	.....	.....
Japan 98,956	Jan. 9, 1933	The Minister of Navy (Buntarô Ôtani, inventor)	Mg alloy	0.1-0.8	0.1-0.8	....	.....	.....	.....
U. S. 1,914,588	June 20, 1933	Robert T. Wood to Magnesium Development Corp.	Mg alloy	.....	0.05-2	....	.....	.....	.....
U. S. 1,914,589	June 20, 1933	Robert T. Wood to Magnesium Development Corp.	Mg alloy	.....	0.05-2	....	.....	.....	.....

TABLE II—Continued.

Patent	Cu	Mg	Mn	Ni	Sb	Si	V	Zn	Pb	Sn	Cd	Remarks
Ger. 535,345	.....	0.2-10*	0.2-2*	0.2-5*	.....	3-15	0.3-2	.....	or Sn up to 3	or Pb up to 3	.....	(1)
Brit. 319,967	.....	0.5-5.0	.....	.....	.....	0.2 optional	.....	.....	.....	.....	.....	
Fr. 729,566	3.5	1	0.5	.....	.....	.....	.....	.....	0.5	.....	1.	
U. S. 1,932,834	.....	2-9	.....	.....	.....	.....	.....	.....	.....	.....	.....	
U. S. 1,932,836	.....	1-8	.....	.....	.....	.....	.....	0.5-6	.....	.....	.....	
U. S. 1,932,837	.....	4	5	.....	.....	.....	.....	.....	.....	.....	.....	
U. S. 1,932,854	.....	2-10	.....	0.2-5	.....	.....	.....	.....	.....	.....	.....	
U. S. 1,932,855	.....	3-7.5	.....	0.2-2	and/or Bi 0.05-0.4	.....	.....	.....	.....	.....	.....	
U. S. 1,932,856	.....	3-8	0.5-4	0.5-4	.....	.....	.....	.....	.....	.....	.....	
U. S. 1,932,857	.....	3-8	0.5-4	0.5-4	and/or Bi 0.05-0.4	.....	.....	.....	.....	.....	.....	
U. S. 1,932,858	.....	2-15	.....	.....	and/or Bi 0.05-0.4	.....	.....	.....	.....	.....	.....	
U. S. 1,932,859	.....	2-10	.....	0.2-5	.....	.....	.....	.....	.....	.....	.....	
U. S. 1,932,860	.....	3-8	.....	0.5-3.5	and/or Bi 0.05-2	.....	.....	.....	.....	.....	.....	
U. S. 1,932,861	1-6	2-10	.....	0.2-5	.....	.....	.....	.....	.....	.....	.....	
U. S. 1,932,862	1-6	3-8	.....	0.5-5	and/or Bi 0.05-0.4	.....	.....	.....	.....	.....	.....	
U. S. 1,932,863	0.5-5	3-8	.....	0.5-5	.....	.....	.....	.....	.....	.....	.....	
U. S. 1,932,864	1-6	3-8	.....	0.5-5	.....	.....	.....	.....	.....	.....	.....	(2)
U. S. 1,932,865	.....	2-10	.....	0.2-5	.....	.....	.....	.....	.....	.....	.....	
U. S. 1,932,866	1-6	3-8	.....	.....	.....	.....	.....	.....	.....	.....	.....	
U. S. 1,932,867	1-6	3-8	.....	.....	and/or Bi 0.05-0.4	.....	.....	.....	.....	.....	.....	
U. S. 1,932,868	.....	3-8	.....	0.5-4	and/or Bi 0.05-0.4	.....	.....	.....	.....	.....	.....	
U. S. 1,932,869	.....	2-15	.....	.....	and/or Bi 0.05-0.4	.....	.....	.....	.....	.....	.....	
U. S. 1,932,870	0.5-5	3-8	.....	0.5-5	.....	.....	.....	.....	.....	.....	.....	
U. S. 1,932,871	.....	2-15	.....	.....	.....	.....	.....	.....	.....	.....	.....	
U. S. 1,932,872	.....	2-9	0.1-4	.....	and/or Bi 0.05-0.4	.....	.....	.....	.....	.....	.....	
Fr. 730,088	.....	Balance	0.1-5	.....	.....	.....	.....	.....	0.1-5	0.1-15	0.1-10	(3)
Japan 98,956	Less than 2	Balance	0.1-0.8	.....	.....	.....	.....	.....	.....	.....	.....	
U. S. 1,914,588	.....	Balance	.....	.....	.....	.....	.....	2-6	.....	4-8	.....	
U. S. 1,914,589	.....	Balance	0.1-2.5	.....	.....	.....	.....	0.1-10	.....	0.1-20	.....	

(1) * One or more of these metals may be used. (2) 0.1-1 of one or more of W, V, Mo, Ti, and Zr added. (3) Barium, 0.1-2.

an alloy of approximately 71 per cent beryllium and 27 per cent calcium is formed.[54]

CHROMIUM-THORIUM-URANIUM METAL POWDERS.

Metallic chromium powder[55] as well as metallic thorium and uranium may be produced either by electrolytic methods or by the reduction of the corresponding oxides by the use of calcium metal in the presence of calcium chloride as a flux. The oxides, calcium chloride, and finely cut calcium are mixed together and introduced into a bomb. The bomb is sealed with a tapered stopper and heated to red heat or to a temperature of approximately 900° C. The calcium serves as a reducing agent, being itself converted to the oxide. After the reaction is completed, the bomb is allowed to cool, the charge removed, disintegrated in cold water, washed in dilute alcohol, and the metallic powder separated. The chromium, thorium, or uranium metal is then sintered into ingots and made into mechanically worked forms and shapes.

CALCIUM IN THE PETROLEUM INDUSTRY.

The possibility of application of the alkali or alkaline earth metals as aides in petroleum refining has aroused a large amount of interest. As a sulfur removal agent, calcium is more effective quantitatively than either potassium or sodium and qualitatively more effective than magnesium. Methods of treatment involve the contacting of the hot oil with the metal in either a solid form such as granules, chips, or flakes, or in a liquid form at temperatures above the melting point of the metal.[56] In this connection, sodium with its low melting point of 97° C. is applicable as a solid metal only over a very limited temperature range, and ordinarily has to be used in the liquid form. The treatment of petroleum oils with calcium or related metals desulfurizes the oil and improves its color and odor. The method gives qualities of final product equal to those made by sulfuric acid refining but involving much smaller losses.

MISCELLANEOUS USES FOR CALCIUM METAL.

Many uses of calcium in connection with lithium, lithium and silicon, or other alkali or alkaline earth metals have been suggested.[57] For

[54] Kroll and Jess, Wiss. Veröffentlich. Siemens-Konzern, **10**, 29-33 (1931).

[55] U. S. Pat. 1,760,367, May 27, 1930, to J. W. Marden and M. N. Rich.

[56] U. S. Pat. 1,865,235, June 28, 1932, to Roy Cross.

[57] French Pat. 722,554, July 7, 1931, to Hans Osborg; also Brit. Pats. 387,685, Feb. 6, 1933; 387,725, Feb. 6, 1933; 387,726, Feb. 6, 1933; 389,150, Mar. 6, 1933; U. S. Pat. 1,869,496; Can. Pat. 340,603, Apr. 3, 1934.

special purposes furnace quality calcium metal can be distilled and very pure products produced, or it may be subjected to sublimation without fusion.[58]

Calcium finds miscellaneous application as a getter in electrical discharge devices and vacuum tubes either in the form of pellets, as wire, as wire coated with magnesium, or other shapes. A considerable number of applications exist which are of the secret process type, descriptions of which are not available.

THE MARKET PRICE OF CALCIUM METAL.

Calcium was made at Niagara Falls some years ago, but at the present time it is produced in the United States only sporadically and more or less experimentally.[59] Two or more of the domestic producers confine their operations to purifying imported metal by sublimation. The world's supply of calcium metal, estimated at 25 tons or more annually, is produced mainly in France and Germany. Domestic requirements are supplied by imports.

The price of calcium, which some 15 years ago was still in the neighborhood of $20 per pound, is now less than $1.50. This price represents metal 98.5 to 99 per cent pure and is furnished in irregular lumps (5 to 10 cm.) packed in 100-pound (45 kg.) tin-lined cases or 10-pound (4.5 kg.) tin cans. It is also offered in 2-ounce (57 g.) pellets, in shavings of various degrees of fineness, and in sticks or extruded wire, all of which carry appropriate extras. Specially purified metal, of course, likewise commands a premium and higher prices are charged for small lots.

DISCUSSION.

F. C. FRARY*: It is true that calcium has been used to a considerable extent in the aluminum industry and in many of the magnesium alloys, but only in small fractions of 1 per cent. Calcium is one of those extremely active elements that may produce a large effect when you have but a very small amount of it present. It is interesting to note that if you have several per cent each of calcium and barium in lead, the lead may be too hard to be cut with a hack saw. Some alloys that Mr. Seward prepared for us in Niagara Falls about 1916 wore out two or three hack saws and could be cut only with an emery wheel.

I was interested to note that apparently the age-hardening of the calcium alloys was not publicly known until quite recently. That was one of the first things I discovered about them when I started to work with them in the laboratory. They would be soft the day I cast them, but if I let them stand a day or two they hardened up. I called that to the attention of the United Lead Company and I know that Dr. Cowan and his associates investigated it quite carefully back in 1916.

[58] U. S. Pat. 1,814,073, July 14, 1931, to Herman E. Bakken of American Magnesium Corp.

[59] Hardy and Tyler, Chemical Markets, 32, 227-30 (1933).

* Director of Research, Aluminum Company of America, New Kensington, Pa.

C. L. MANTELL: The basic calcium salts form as a result of the absorption of moisture in the atmosphere in the neighborhood of the cell, or as a result of re-oxidation of calcium either as metal fog or as calcium particles which might fall off the electrode. There does not seem to be any effective way of combating the formation of these basic salts.

D. W. RANDOLPH[60]: Is there any definite information on the effect of calcium on the separation of lead in a copper-lead mixture? I did some experimental work along that line and I did not notice that calcium had anything to do with this separation.

C. L. MANTELL: There is some definite information but, unfortunately, it is part of a secret process and the information is not available. That is the situation with a large number of calcium and alkaline earth metal applications.

D. W. RANDOLPH: There is a rapidly rising interest in the automotive industry in high-speed engines. The company I am associated with manufactures copper-lead bearings by a process that does prevent the separation of the lead. The process is no mystery. It consists in cooling the cast metal very rapidly. We found that to be a very effective procedure.

C. L. MANTELL: Herschman and Basil[61] at the Bureau of Standards, working on high-lead bearing metals, found that segregation could be prevented by the introduction of small amounts of calcium.

R. F. COHN[62]: In a previous paper[63] published by the Society some data were given showing that calcium causes considerable concentration of copper in copper-lead alloys. Certain other reagents are more economical to use.

F. C. FRARY: The addition of a few tenths of one per cent of calcium to aluminum has been shown by some English investigators to increase very appreciably the electrical conductivity of aluminum, solely because the calcium combines with a few tenths of a per cent of silicon present in the aluminum, to form insoluble calcium silicide. We find calcium very active in combining with other elements such as silicon or copper, to form these insoluble constituents, and resulting in a decided effect upon the physical properties and behavior of the metal treated.

I was a little surprised to hear Dr. Mantell's statement that basic salts accumulated in the calcium chloride electrolyte, because our own experience years ago showed us that calcium oxide was soluble to the extent of several per cent in fused calcium chloride; and that, if you electrolyzed that solution, one of the first things that happened was that the calcium oxide content was reduced to zero and you had straight calcium chloride. I rather suspect that the so-called "basic salts" are not calcium oxide, but either magnesium suboxide, calcium carbide or carbon.

R. F. COHN: Technical literature reports that calcium explodes when being dissolved in metallic lead. As a matter of fact, it is extremely difficult to dissolve calcium in metallic lead if the lead is quite pure.

C. L. MANTELL: All you have to do to observe that phenomenon is to heat your lead up to a temperature around 300° C., add your calcium and an explosive reaction follows.

R. F. COHN: Explosive reaction takes place only if the lead is not pure.[64]

R. L. SEABURY[65]: I would like to offer a suggestion to Dr. Mantell for consideration for inclusion under the miscellaneous uses of calcium metal. Having had occasion to prepare some anhydrous alcohol a few years ago, it was suggested to me to try the dehydration of alcohol with lime up to the limit of that reaction, which is somewhere slightly in excess of 99 per cent, and then eliminate the last traces of water by suspending calcium shavings in a basket in the nearly dehy-

[60] A. C. Spark Plug Company, Flint, Mich.

[61] See footnote 42.

[62] Reynolds Wire Company, Dixon, Ill.

[63] Trans. Electrochem. Soc., **59**, 107-12 (1931).

[64] Cohn, R. F., U. S. Patent, 1,925,687, Sept. 5, 1933.

[65] Director of X-Ray Research Laboratories, Delco-Remy Division of General Motors Corp., Anderson, Ind.

drated alcohol. Calcium metal is a very effective reagent for the purpose, and the process can be carried out easily. The first product of reaction is calcium hydroxide which, of course, is white. But as soon as all of the water in the alcohol has been taken up, the precipitate takes on a gray-green color and this indicates that the reaction is complete. The only difficulty is that this dehydration may be a little violent. Therefore, the calcium needs to be suspended in the alcohol in some manner that would permit its rapid removal when the reaction tends to become too violent. When the last traces of water have been removed in this way, upon then distilling the alcohol a very excellent product can be obtained.

C. L. MANTELL: We have used that very scheme for a number of years in our laboratory and believe it is common knowledge rather than special knowledge.

W. KROLL[66] (*Communicated*): We have been engaged for the last 15 years in research work on calcium and its alloys, and in the development of manufacturing processes for same. The authors' remarkable contribution to the technology of calcium is not complete as far as the European bibliography of calcium is concerned.

The melting point of Ca is considerably influenced by the presence of impurities, especially nitrogen. Antropoff and Falk[67] found the true melting point of sublimed Ca, free of nitride, at a temperature of 851° C. ± 1°. A eutectic formed between the metal and the nitride melts at 780° C., so that small amounts of nitrogen may reduce the melting point as much as 70° C. The boiling point of calcium is given by Hartmann and Schneider[68] as 1,439° C. These data correspond closely to my own. Curiously enough, pure Ca can exist in three allotropic modifications.[69, 70] At room temperature, the structure of the alpha-calcium is cubic, surface-centered. The heat of formation of the oxide given by Landolt-Börnstein and by the International Critical Tables is 151.9 and 151.5 cal. respectively; that of the chloride 190.6 cal. (Landolt-Börnstein), whereas for 2NaCl they give the value of 197.0. The Brinell hardness value I found using five times distilled calcium (99.95 per cent pure) was 16.1 (1,000 kg./10 mm. ball/1 min.). Bastien[70] gives the following mechanical properties of sublimed Ca: hardness, 13 Brinell (2 mm. ball/10 kg. load); tensile strength 4.4 kg./mm.^{2}; elongation 53 per cent; reduction in area 62 per cent. Barium metal, twice distilled, gives a hardness of 9.9 Brinell (500 kg./10 mm. ball/1 min.). Calcium can easily be purified by distillation or sublimation.[71] Ca_3N_2 together with Si, Fe, Al and C remain in the residue, while H_2Ca is partly decomposed and can be eliminated completely only by repeated treatment. Mg and the alkaline metals can be separated by fractionating.

Calcium compounds can easily be reduced, in the presence of a good vacuum, by the metals Si, Ti, Al or Be. The reduction is a function of pressure and temperature.[72] Calcium is a poor reducing agent, as compared with Al or even Si, when high temperatures are involved.

The best treatise on Ca and its metallurgy is that by V. Engelhardt-V. Makow.[73] It was not mentioned by the authors. Most of the Ca produced in the world, so far as it is employed in alloys, is made by chemical reactions, and the direct electrochemical process is of small importance. About 60 tons of Ca, chemically produced, are employed in the world in lead alloys and for the debismuthizing of lead, probably only 25 tons in addition are made by the fused electrolyte method and used for other purposes. The chemical processes for making calcium alloys are

[66] Bel' Airstr., 44, Luxemburg.

[67] A. von Antropoff and E. Falk, Z. anorg. allgem. Chem., **187**, 415 (1930).

[68] H. Hartmann and R. Schneider, Z. anorg. allgem. Chem., **180**, 283 (1929).

[69] L. Graf, Physik. Z., **14/15**, 551-557 (1934); *ibid.*, Mitt. Physik.-Tech. Reichsanstalt (1933); A. Schulze and H. Schulte, Overberg, Metallwirtschaft, **44**, 633 (1933); **45**, 649 (1934).

[70] P. Bastien, Compt. Rend. Acad. Sci., **198**, 831 (1934).

[71] J. Hérenguel et P. Bastien, J. Four Elec., **10**, 358 (1933), XIIIe Congrès de Chimie Industrielle.

[72] W. Kroll, Z. anorg. allgem. Chem., **219**, 301 (1934).

[73] Handbuch der technischen Elektrochemie.-Die technische Elektrolyse im Schmelzfluss. Akademische Verlagsgesellschaft, Leipzig (1933).

much cheaper. The old reaction of Caron[74] consists in reacting the sodium of a sodium-lead alloy with molten calcium chloride. Ca enters the alloy, and Na is converted into sodium chloride. This reaction was put into practice by myself and by the Metallgesellschaft at Frankfort, where it is employed today.[75] The procedure is quite simple, no special plant is needed other than that generally found in lead foundries. This is a great advantage over the Frary electrolytic process using lead cathodes, which requires a large capital investment. Sodium is utilized in this "chloride process" to an efficiency of 75 to 80 per cent. One kg. Ca requires 6 to 8 kg. $CaCl_2$, 98/99 per cent. The spent salts with 40/60 per cent NaCl are either dumped or retreated by wet processes to recover the two salts. This chloride process has been the subject of a good deal of scientific research work, and the equilibria are now completely cleared up by Jellinek, Lorenz, and their collaborators.[76] Furthermore, in consequence of this research we have gotten a better comprehension of the equilibria reactions between the impurities of raw iron and the slag.

In the United States preference is given to the much cheaper process developed by Jesse O. Betterton, and the American Smelting & Refining Co. The idea of this reaction I patented in the year 1916.[77] It may be expressed by the equation: $CaC_2 + 3\ Pb = Pb_3Ca + 2C$. The compound formation between Pb and Ca being extremely exothermic, the Pb readily dissolves the Ca contained in the CaC_2, providing conditions are suitable, namely, in the absence of air or under a fused salt cover. The Ca produced by the sodium or carbide process costs, in the alloys, from ½ to ⅓ the price of the pure metal. Actually it is much cheaper to prepare Ca metal by starting with a soluble anode of PbCa prepared from CaC_2 at a voltage of only 3.5 volts than to electrolyze $CaCl_2$ under high voltage, poor current efficiency and chlorine evolution.[78]

Another more recent process was patented by Calloy & Kirsebom Ltd.[79] It consists of reducing CaO with Al, making a calcium-aluminum alloy, heating this alloy in the presence of lead in which Al is insoluble, the Ca forming the compound Pb_3Ca.

The matter of debismuthizing Pb with Ca has not been properly presented by the authors. The basic patents are U. S. A. No. 1,428,041 (1920, Kroll), and D. R. P., 410,533. They have been brought to a commercial state by Jesse O. Betterton and the American Smelting & Refining Co.[80] for the debismuthizing of lead. The patented idea, however, is much broader, and it concerns the elimination of impurities, especially As, Sb, Bi, S, and Se, in metals by the addition of alkaline, alkaline earth and earth-metals.[81] The elimination of Sb contained in solder by means of Al, Mg, or Na by this means is today being exploited commercially. The presence of As involves the danger of poisoning by AsH_3. Ca is a good scavenger for Cu, but the important mistake made in research work on the deoxidation of Cu with Ca is that investigators ignored the fact that besides oxygen, Sb, As, Se, S, and even Bi[82] react with Ca to form compounds, some of which may enter the slag. The high conductivity results after treatment of Cu with Ca are not due solely to deoxidation, but also to the neutralization or elimination of other harmful impurities.

The applicability of Ca as a scavenger for steel is rather doubtful. Ca does not dissolve in Fe, so that the reaction can take place only superficially. Ca boils at 1,439° C., so that in molten steel it can exist only as vapor. In Europe CaPb

[74] Compt. Rend., **48**, 440 (1859).

[75] U. S. Patent 1,359,813 (1920); D. R. P. 381,049 and 399,399 (1920).

[76] K. Jellinek and J. Czerwinski, Jubelband Nernst, Z. physik. Chem., **110**, 192 (1924); R. Lorenz and R. Winzer, Z. anorg. allgem. Chem., **181**, 193 (1929); **183**, 127 (1929).

[77] D. R. P. 381,577, Metallbank and Metallurgische Gesellschaft; U. S. A. 1,707,059, W. Kroll.

[78] D. R. P. 458,493, W. Kroll.

[79] Brit. Pat. 403,120, Calloy and Kirsebom, Ltd.

[80] R. F. Cohn, Trans. Electrochem. Soc., **59**, 107-113 (1931).

[81] W. Kroll, Metall u. Erz, **19** (n. f. 10), 317 (1922).

[82] Leo Meissner, Essen, D. R. P. 352,685.

alloys were tried out for the desulfurization of iron, and during the war Ca-Si compounds were employed for the same purpose, but in either case poor results were obtained.

One interesting application of Ca is that proposed by the I. G. Farbenindustrie[83], namely, to mix powdered Ca alloys, essentially Mg-Zn-Ca, with cement for making gas concrete. Such a mixture blows up like bread within a few hours, producing a light porous mass with low heat-conductivity. Such bricks can be employed for insulation, and for construction purposes.

CHARLES HARDY (*Communicated*): The discussion submitted by Dr. Kroll has been read with much interest and it is certainly a very valuable contribution to the information available on calcium. However, in answer to this discussion, we desire to point out that our paper was written mainly with a view to showing what metallic calcium will do—not how to produce metallic calcium and alloys thereof. If we had desired to cover by our paper the alloys of calcium, we would have had to consider the many metallic alloys—calcium silicide, calcium aluminum, calcium lead, calcium copper and others. The melting point of calcium is considerably influenced by the presence of impurities, as rightfully stated by Dr. Kroll. However, the boiling point, also, is very considerably influenced by the impurities and, as we are dealing with calcium from its commercial point of view, i.e., calcium as it is employed in the industry, we are dealing with a calcium whose purity lies around 99 per cent. The impurities are mainly sodium, sodium carbonate, calcium carbonate and calcium oxide. The melting point of this calcium lies around 1,200° C., compared with 1,439° C. for the pure calcium. It would not be possible, for commercial application, to distill calcium five or six times, as Dr. Kroll suggests.

In considering the use of metallic calcium, it must also be taken into account that the exothermic reaction of calcium develops heat far in excess of the generally accepted figures. According to Henri Moissan,[84] and according to Professor Fischer,[85] the heat of formation is so great when the calcium oxide is formed at a temperature in excess of 300° C. that the calcium oxide becomes volatilized. In our work we have taken this heat factor into consideration and the introduction of 5 per cent of calcium to lead and zinc has increased the temperature in the crucible from 510° C. to about 800° C.—a temperature sufficient to fuse the anhydrous calcium chloride which was used to cover the charge.

CHAS. L. MANTELL (*Communicated*): In industrial practice we have not found "calcium is such a bad reducing agent as compared with Al or even Si". Quite the contrary is true. It is interesting that one of the authors materially assisted in the best treatise referred to by Dr. Kroll. As to the industrial importance of the electrochemical process, Dr. Kroll, being unfamiliar with American use of calcium, is not in a position to render opinion.

The electrolytic method for calcium-lead alloys needs no defense or economic justification on our part. It is interesting to note the large amount of work which has been done on deoxidation of Cu by Ca by competent experimenters. These reports have been referred to in our paper.

Dr. Kroll has overlooked the fact that our paper, essentially, was in reference to American utilization of calcium metal, and calcium metal as commercially available and employed in that form.

COLIN G. FINK[86] (*Communicated*): We have read Dr. Kroll's comments with much interest. It is worth noting that the so-called "chemical" methods discussed are, in fact, by-product electrochemical methods: The sodium method depends upon electrochemically produced sodium; the calcium carbide method depends upon the well-known electric furnace product.

[83] J. Meyer, Zement, **16**, 1002, 1026, 1263 (1927).

[84] Compt. Rend. (1899).

[85] Latest issue of British Encyclopedia.

[86] Head, Division of Electrochemistry, Columbia University, New York City.